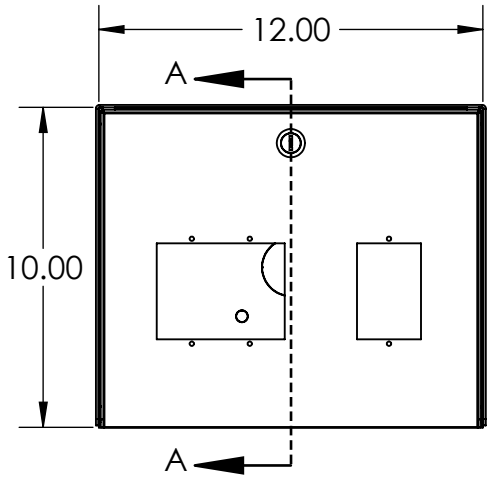

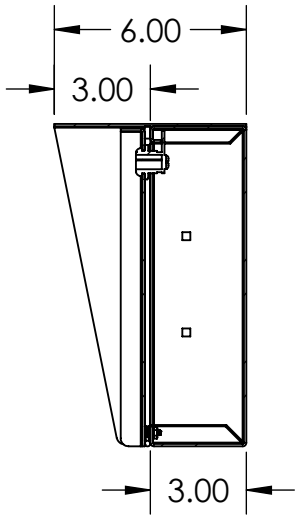

SECTION A-A

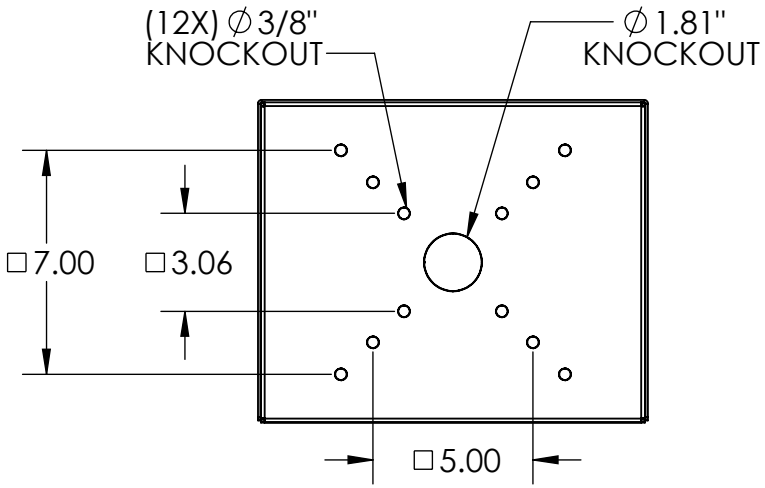

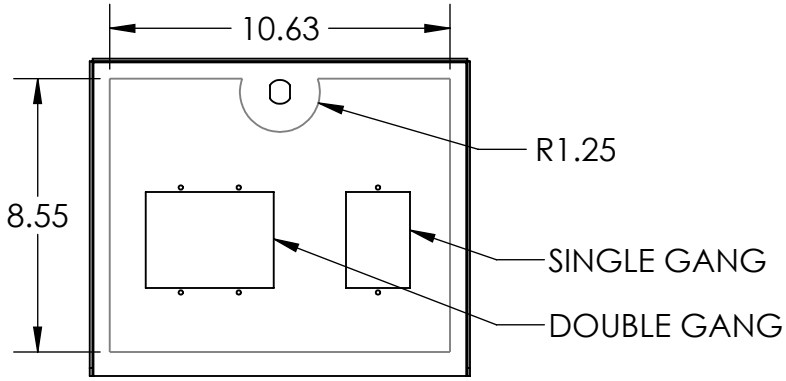

AVAILABLE CUTOUT AREA

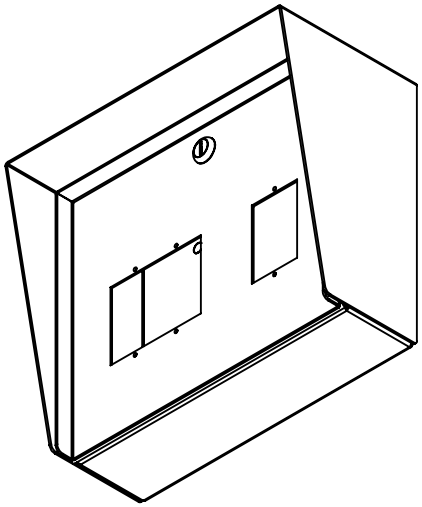

NOTES:

1. MATERIAL OF CONSTRUCTION IS 304 SS, BRUSHED #4.

PEDESTALPRO.COM
1-800-660-3072

UNLESS OTHERWISE SPECIFIED:

DIMENSIONS ARE IN INCHES
TOLERANCES:
FRACTIONAL ±1/32
ANGULAR: ±2°
TWO PLACE DECIMAL ±0.010
THREE PLACE DECIMAL ±0.005

INTERPRET GEOMETRIC TOLERANCING PER: ASME Y14.5 -2009

★	NAME	DATE
DRAWN		
CHECKED		

PROPRIETARY AND CONFIDENTIAL

THE INFORMATION CONTAINED IN THIS DRAWING IS THE SOLE PROPERTY OF PEDESTALPRO LLC. ANY REPRODUCTION IN PART OR AS A WHOLE WITHOUT THE WRITTEN PERMISSION OF PEDESTALPRO LLC IS PROHIBITED.

TITLE:

INSTALLATION

Friday, June 26, 2026
8:37:09 AM

SIZE: A

PART NO.: XPRO-HG002S

REV: A

WEIGHT: 12.543

NO SCALE

SHEET 1 OF 6

ITEM NO.	PART NUMBER	DESCRIPTION	QTY.
1	XPRO-HG002S ENCLOSURE	ENCLOSURE WELDMENT	1
2	XPRO-HG002S DOOR	DOOR WELDMENT	1
3	XPRO-HG002S HOOD	HOOD	1
4	HINGE	PIANO HINGE	1
5	CAM LOCK	STRAIGHT CAM	1
6	GASKET SIDE	3/8" X .150 WEATHERSTRIPPING	2
7	GASKET TOP	3/8" X .150 WEATHERSTRIPPING	1
8	--	6-32 PAN HEAD SCREW	4
9	--	6-32 EXTERNAL TOOTH LOCK NUT	4

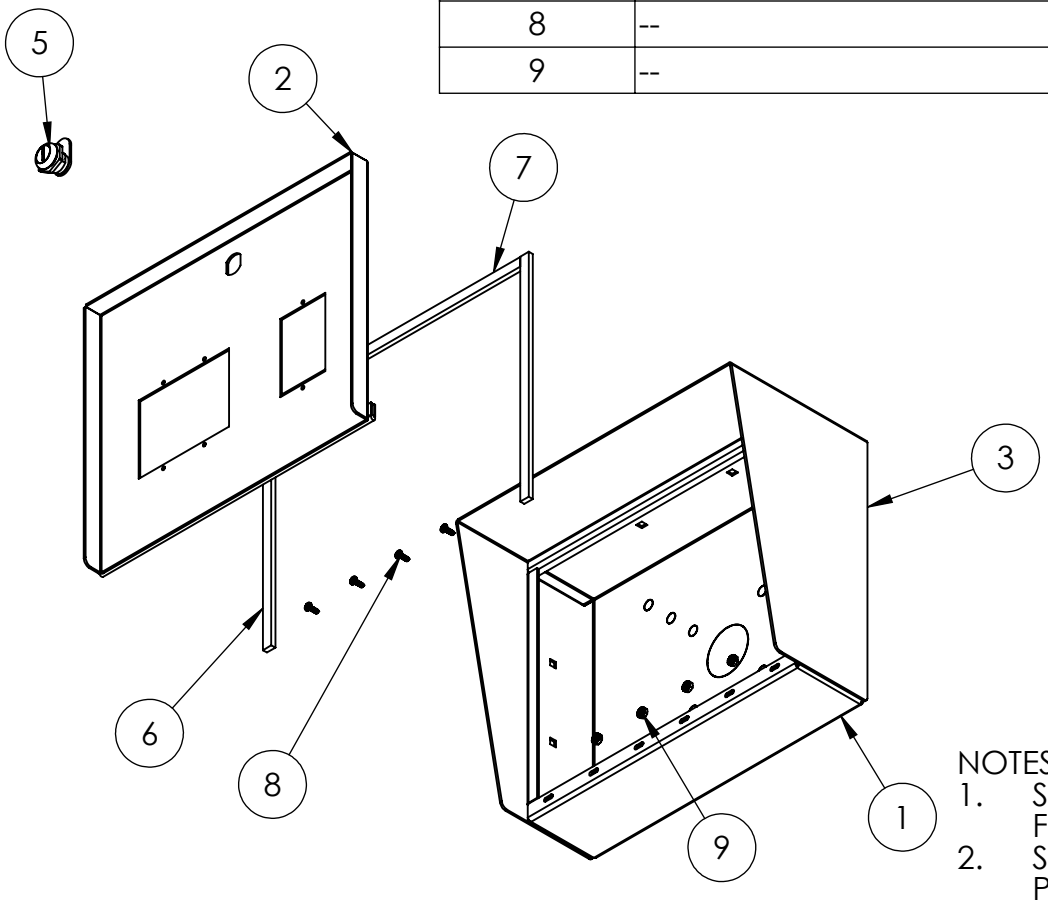

NOTES:
1. SEE STANDARD PREPARATION AND COATING INSTRUCTIONS FOR COATING PROCEDURE AND COLOR.
2. SEE STANDARD PACKAGING INSTRUCTIONS FOR PACKAGING PROCEDURE.

PEDESTALPRO.COM
1-800-660-3072

UNLESS OTHERWISE SPECIFIED:

DIMENSIONS ARE IN INCHES
TOLERANCES:
FRACTIONAL ±1/32
ANGULAR: ±2°
TWO PLACE DECIMAL ±0.010
THREE PLACE DECIMAL ±0.005

INTERPRET GEOMETRIC TOLERANCING PER: ASME Y14.5 -2009

	NAME	DATE
DRAWN		
CHECKED		

PROPRIETARY AND CONFIDENTIAL

THE INFORMATION CONTAINED IN THIS DRAWING IS THE SOLE PROPERTY OF PEDESTALPRO LLC. ANY REPRODUCTION IN PART OR AS A WHOLE WITHOUT THE WRITTEN PERMISSION OF PEDESTALPRO LLC IS PROHIBITED.

TITLE:
ASSEMBLY

Friday, June 26, 2026
8:37:09 AM

SIZE: A
PART NO.: XPRO-HG002S
REV: A

WEIGHT: 12.543
NO SCALE
SHEET 2 OF 6