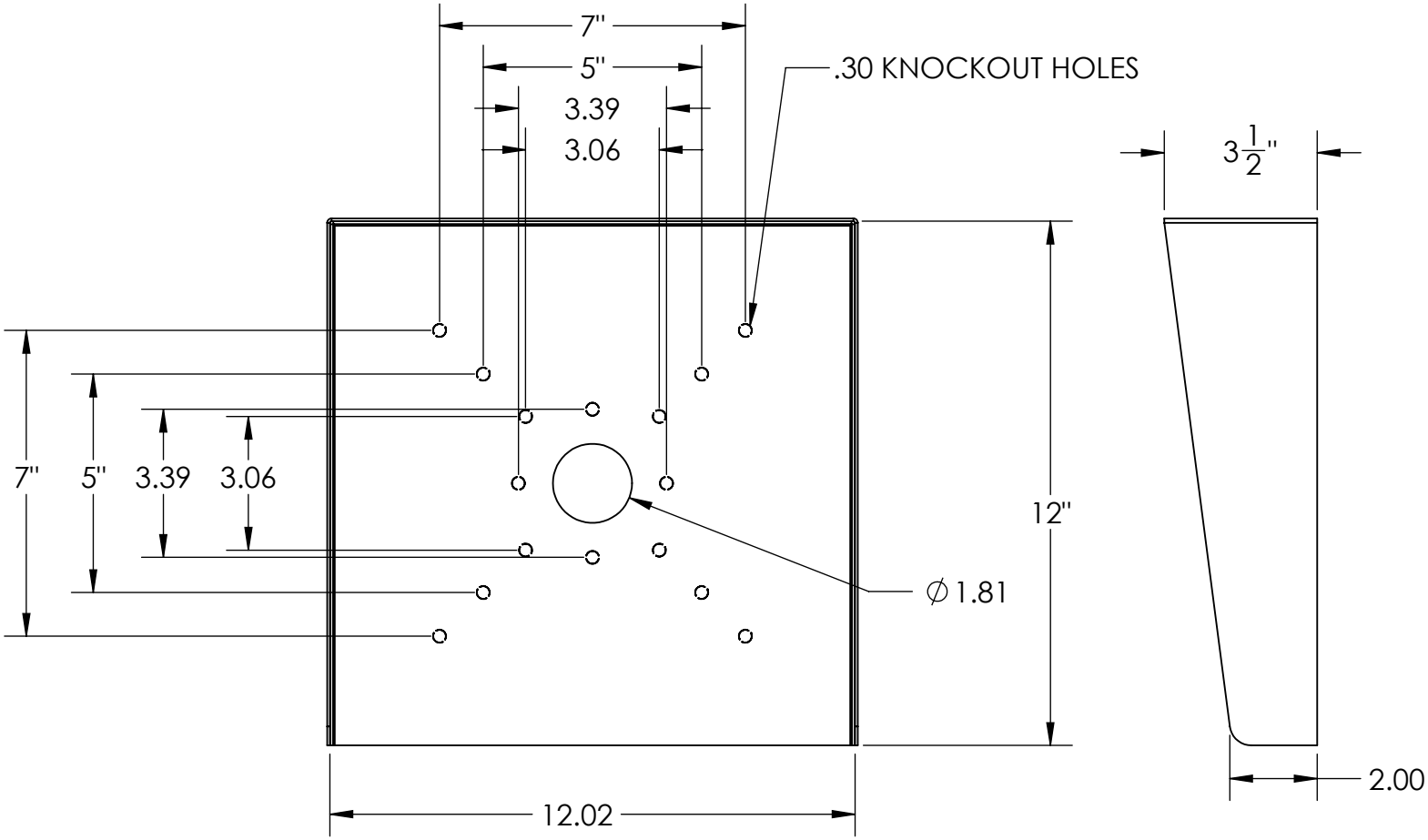

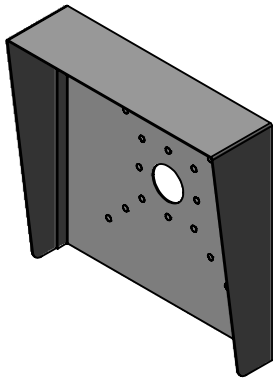

PEDESTALPRO.COM
1-800-660-3072

UNLESS OTHERWISE SPECIFIED:

DIMENSIONS ARE IN INCHES
TOLERANCES:
FRACTIONAL ±1/32
ANGULAR: ±2°
TWO PLACE DECIMAL ±0.010
THREE PLACE DECIMAL ±0.005

INTERPRET GEOMETRIC TOLERANCING PER: ASME Y14.5 -2009

	NAME	DATE
DRAWN		
CHECKED		

PROPRIETARY AND CONFIDENTIAL

THE INFORMATION CONTAINED IN THIS DRAWING IS THE SOLE PROPERTY OF PEDESTALPRO LLC. ANY REPRODUCTION IN PART OR AS A WHOLE WITHOUT THE WRITTEN PERMISSION OF PEDESTALPRO LLC IS PROHIBITED.

TITLE:

INSTALLATION

Thursday, September 13, 2018 12:05:51 PM

SIZE: A

PART NO.: HOOD-CS-12X12

REV: A

WEIGHT:

NO SCALE

SHEET 1 OF 4