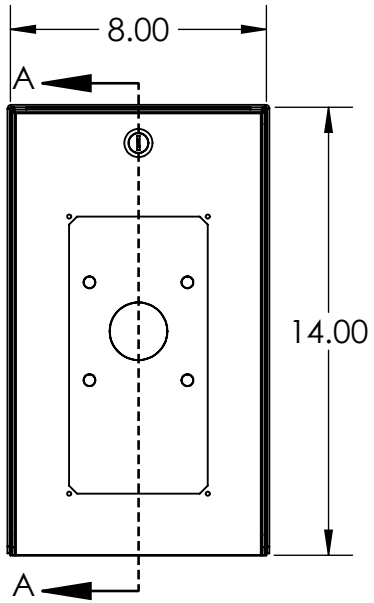

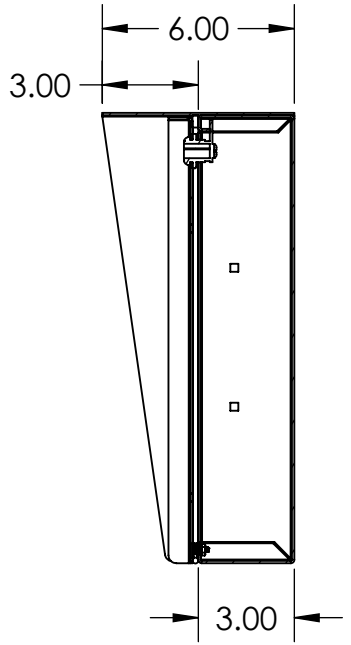

SECTION A-A

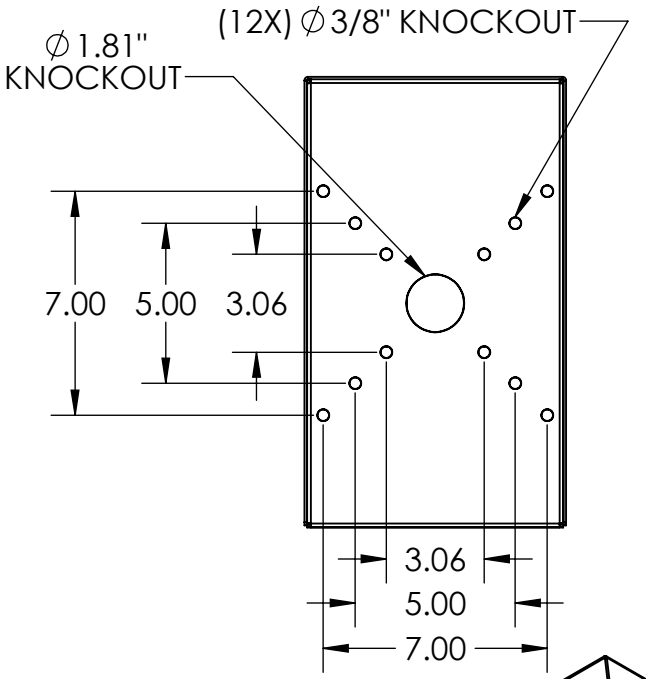

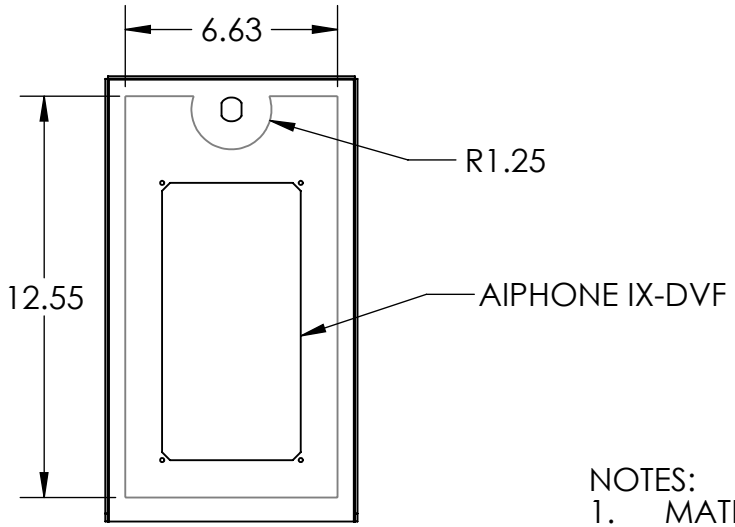

AVAILABLE CUTOUT AREA

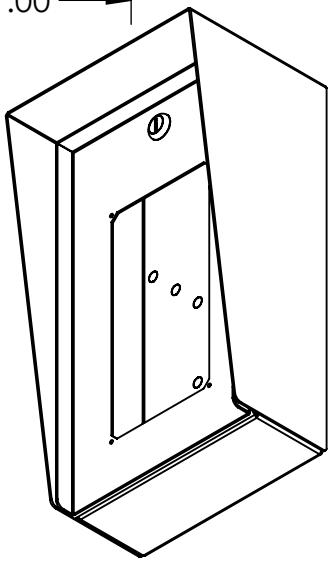

NOTES:
1. MATERIAL OF CONSTRUCTION IS MILD STEEL.
2. 2-4 MILS BLACK WRINKLE POWDER COAT.
   1. PWDR-BLACK-WRINKLE

PEDESTALPRO.COM
1-800-660-3072

UNLESS OTHERWISE SPECIFIED:

DIMENSIONS ARE IN INCHES
TOLERANCES:
FRACTIONAL ±1/32
ANGULAR: ±2°
TWO PLACE DECIMAL ±0.010
THREE PLACE DECIMAL ±0.005

INTERPRET GEOMETRIC TOLERANCING PER: ASME Y14.5 -2009

★	NAME	DATE
DRAWN		
CHECKED		

PROPRIETARY AND CONFIDENTIAL

THE INFORMATION CONTAINED IN THIS DRAWING IS THE SOLE PROPERTY OF PEDESTALPRO LLC. ANY REPRODUCTION IN PART OR AS A WHOLE WITHOUT THE WRITTEN PERMISSION OF PEDESTALPRO LLC IS PROHIBITED.

TITLE:
INSTALLATION

Wednesday, July 24, 2024
3:08:22 PM

SIZE: A

PART NO.: 814HOU-AIPH-02-CRS

REV: C

WEIGHT: 11.628

NO SCALE

SHEET 1 OF 6

ITEM NO.	PART NUMBER	DESCRIPTION	QTY.
1	814HOU-AIPH-02-CRS ENCLOSURE	ENCLOSURE WELDMENT	1
2	814HOU-AIPH-02-CRS DOOR	DOOR WELDMENT	1
3	814HOU-AIPH-02-CRS HOOD	HOOD	1
4	HINGE	PIANO HINGE	1
5	CAM LOCK	STRAIGHT CAM	1
6	GASKET SIDE	3/8" X .150 WEATHERSTRIPPING	2
7	GASKET TOP	3/8" X .150 WEATHERSTRIPPING	1
8	--	6-32 PAN HEAD SCREW	4
9	--	6-32 EXTERNAL TOOTH LOCK NUT	4

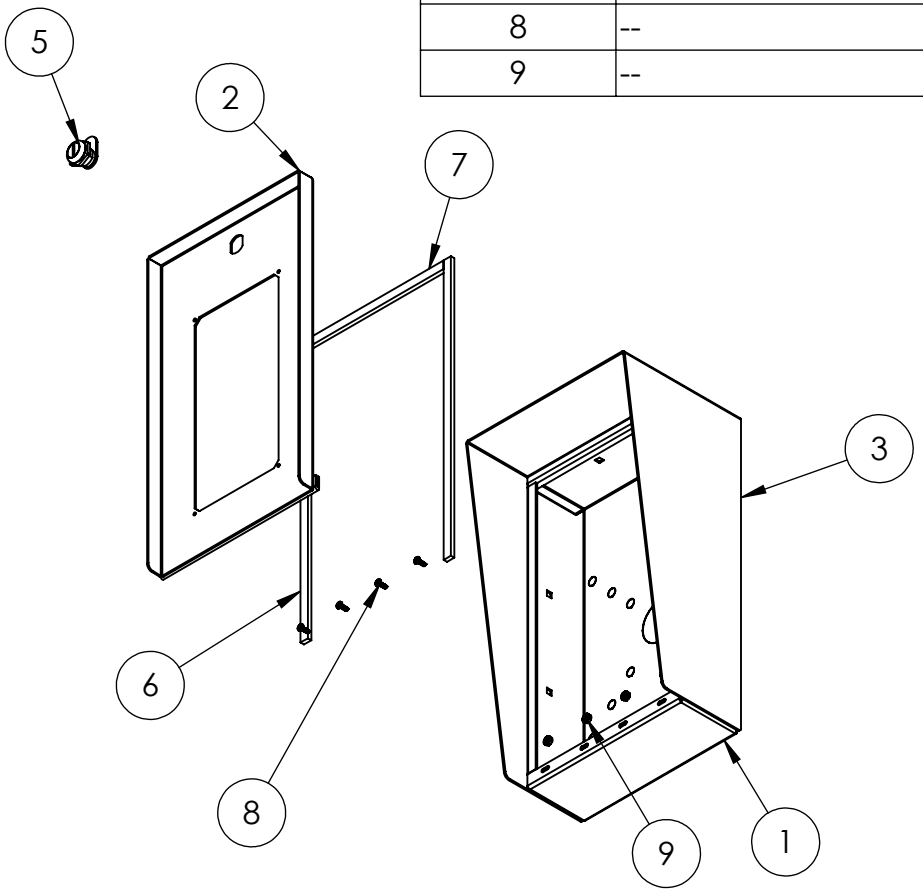

NOTES:
1. SEE STANDARD PREPARATION AND COATING INSTRUCTIONS FOR COATING PROCEDURE AND COLOR.
2. SEE STANDARD PACKAGING INSTRUCTIONS FOR PACKAGING PROCEDURE.

PEDESTALPRO.COM
1-800-660-3072

UNLESS OTHERWISE SPECIFIED:

DIMENSIONS ARE IN INCHES
TOLERANCES:
FRACTIONAL ±1/32
ANGULAR: ±2°
TWO PLACE DECIMAL ±0.010
THREE PLACE DECIMAL ±0.005

INTERPRET GEOMETRIC TOLERANCING PER: ASME Y14.5 -2009

	NAME	DATE
DRAWN		
CHECKED		

PROPRIETARY AND CONFIDENTIAL

THE INFORMATION CONTAINED IN THIS DRAWING IS THE SOLE PROPERTY OF PEDESTALPRO LLC. ANY REPRODUCTION IN PART OR AS A WHOLE WITHOUT THE WRITTEN PERMISSION OF PEDESTALPRO LLC IS PROHIBITED.

TITLE:
ASSEMBLY

Wednesday, July 24, 2024
3:08:22 PM

SIZE A

PART NO. 814HOU-AIPH-02-CRS

REV C

WEIGHT: 11.628

NO SCALE

SHEET 2 OF 6