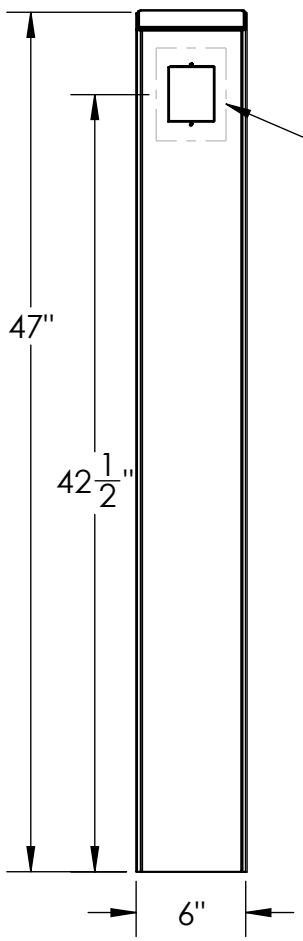

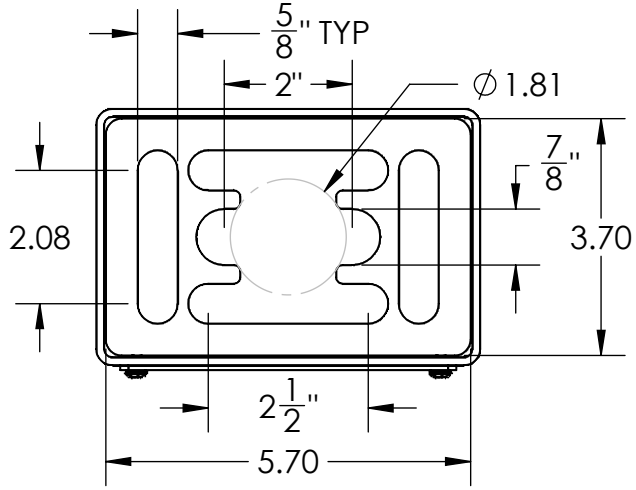

DETAIL A

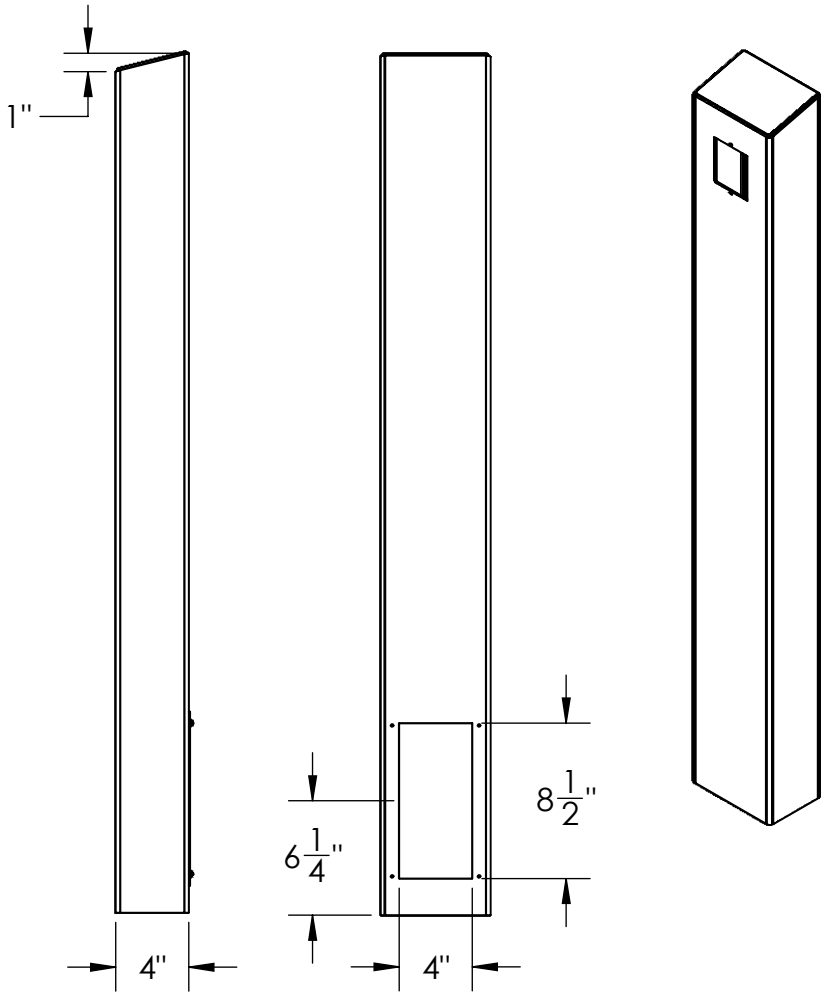

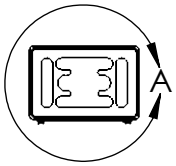

NOTES:
1. MATERIAL OF CONSTRUCTION IS 304 SS, BRUSHED #4.

PEDESTALPRO.COM
1-800-660-3072

UNLESS OTHERWISE SPECIFIED:

DIMENSIONS ARE IN INCHES
TOLERANCES:
FRACTIONAL ±1/32
ANGULAR: ±2°
TWO PLACE DECIMAL ±0.010
THREE PLACE DECIMAL ±0.005

INTERPRET GEOMETRIC TOLERANCING PER: ASME Y14.5 -2009

	NAME	DATE
DRAWN		
CHECKED		

PROPRIETARY AND CONFIDENTIAL

THE INFORMATION CONTAINED IN THIS DRAWING IS THE SOLE PROPERTY OF PEDESTALPRO LLC. ANY REPRODUCTION IN PART OR AS A WHOLE WITHOUT THE WRITTEN PERMISSION OF PEDESTALPRO LLC IS PROHIBITED.

TITLE:
INSTALLATION

Tuesday, October 23, 2018 1:52:42 PM

SIZE: A

PART NO.: 64TOW-AIPH-12-304

REV: B

WEIGHT: 33.428

NO SCALE

SHEET 1 OF 7

ITEM NO.	PART NUMBER	DESCRIPTION	QTY.
1	64TOW-AIPH-12-304	TOWER WELDMENT	1
2	PLTCAP-46-46-30	CAP	1
3	PLTACC-510	ACCESS PANEL	1
4	PLTBAS-46-46	BASE PLATE	1
5	--	8-32 X 1/2" SS BUTTON HEAD SCREW	4

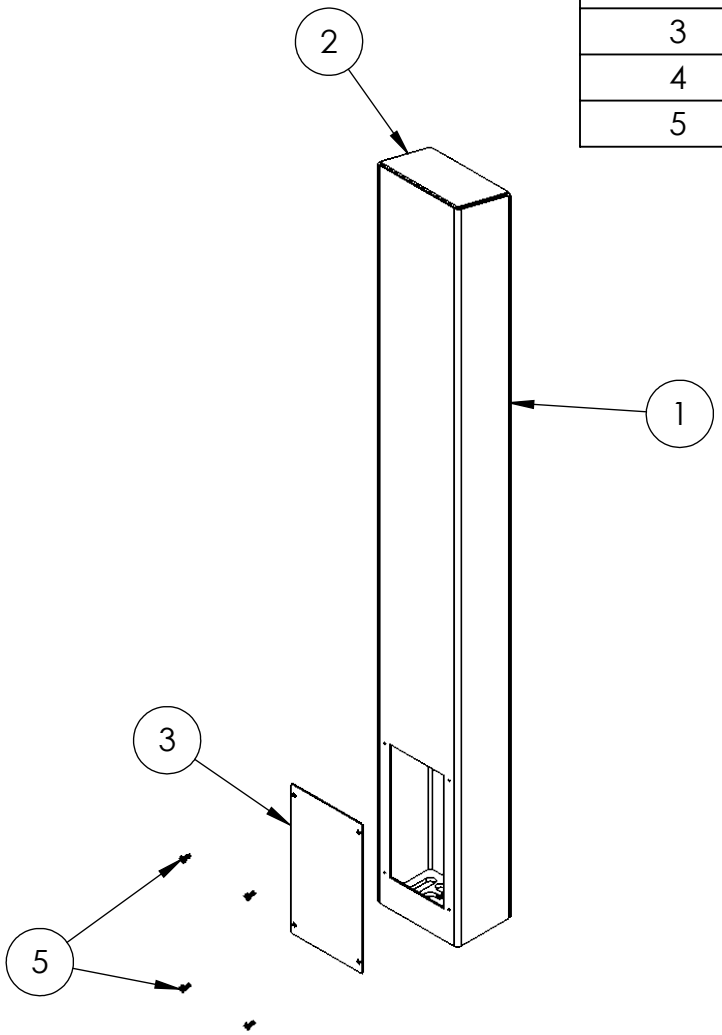

NOTES:
1. SEE STANDARD PREPARATION AND COATING INSTRUCTIONS FOR COATING PROCEDURE AND COLOR.
2. SEE STANDARD PACKAGING INSTRUCTIONS FOR PACKAGING PROCEDURE.

PEDESTALPRO.COM
1-800-660-3072

UNLESS OTHERWISE SPECIFIED:

DIMENSIONS ARE IN INCHES
TOLERANCES:
FRACTIONAL ±1/32
ANGULAR: ±2°
TWO PLACE DECIMAL ±0.010
THREE PLACE DECIMAL ±0.005

INTERPRET GEOMETRIC TOLERANCING PER: ASME Y14.5 -2009

	NAME	DATE
DRAWN		
CHECKED		

PROPRIETARY AND CONFIDENTIAL

THE INFORMATION CONTAINED IN THIS DRAWING IS THE SOLE PROPERTY OF PEDESTALPRO LLC. ANY REPRODUCTION IN PART OR AS A WHOLE WITHOUT THE WRITTEN PERMISSION OF PEDESTALPRO LLC IS PROHIBITED.

TITLE:
ASSEMBLY

Tuesday, October 23, 2018 1:52:42 PM

SIZE A | PART NO. 64TOW-AIPH-12-304 | REV B

WEIGHT: 33.428 | NO SCALE | SHEET 2 OF 7