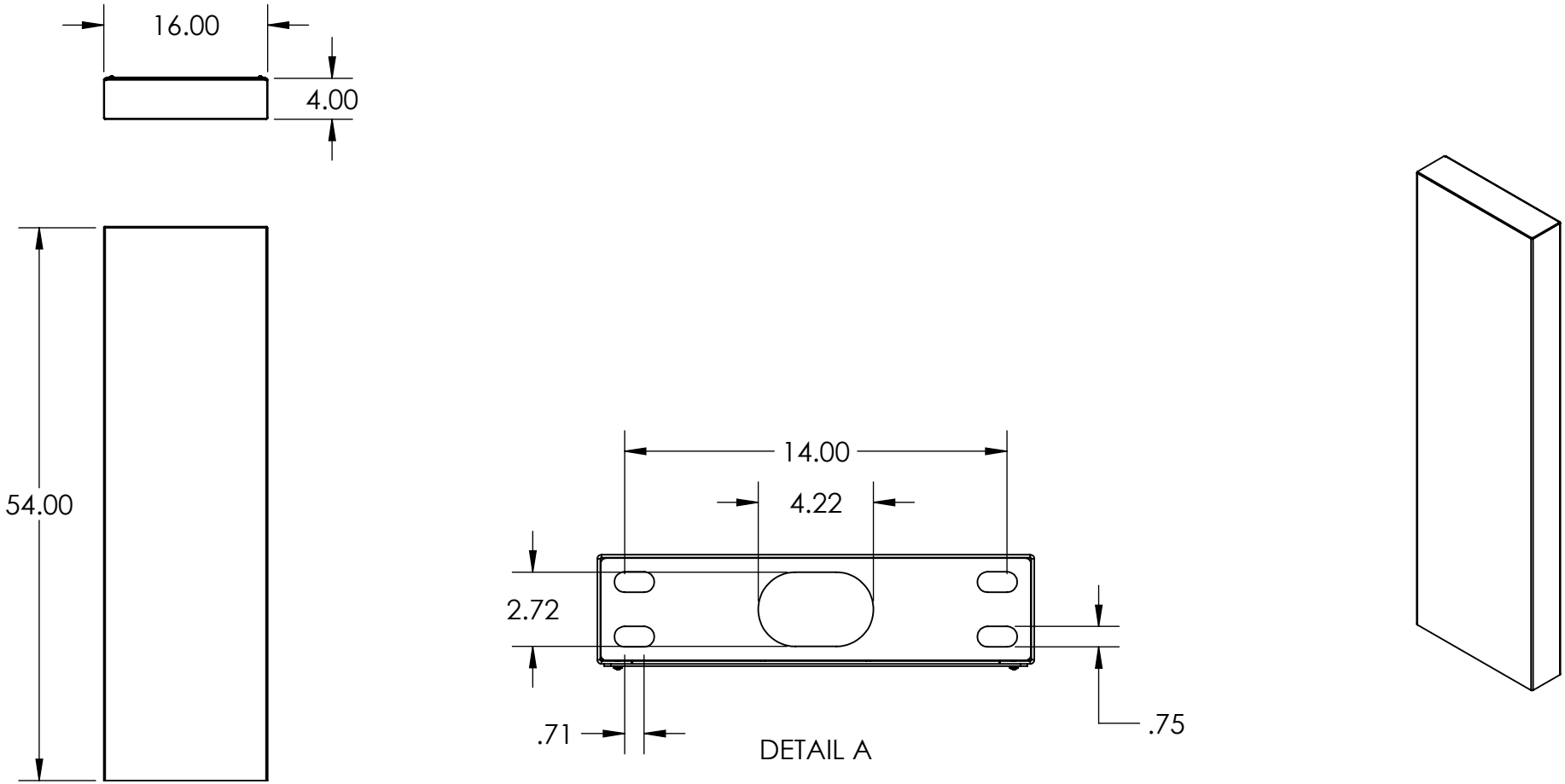

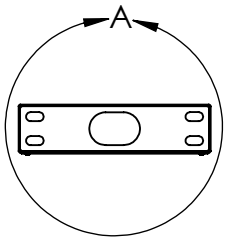

NOTES:
1. MATERIAL OF CONSTRUCTION IS 304 SS, BRUSHED #4.

PEDESTALPRO.COM
1-800-660-3072

UNLESS OTHERWISE SPECIFIED:

DIMENSIONS ARE IN INCHES
TOLERANCES:
FRACTIONAL ±1/32
ANGULAR: ±2°
TWO PLACE DECIMAL ±0.010
THREE PLACE DECIMAL ±0.005

INTERPRET GEOMETRIC TOLERANCING PER: ASME Y14.5 -2009

	NAME	DATE
DRAWN		
CHECKED		

PROPRIETARY AND CONFIDENTIAL

THE INFORMATION CONTAINED IN THIS DRAWING IS THE SOLE PROPERTY OF PEDESTALPRO LLC. ANY REPRODUCTION IN PART OR AS A WHOLE WITHOUT THE WRITTEN PERMISSION OF PEDESTALPRO LLC IS PROHIBITED.

TITLE:
INSTALLATION

THURSDAY, DECEMBER 19, 2024 11:08:06 AM

SIZE: A

PART NO.: 164TOW-PRO-001-304

REV: A

WEIGHT: 78.164

NO SCALE

SHEET 1 OF 9

ITEM NO.	PART NUMBER	DESCRIPTION	QTY.
1	164TOW-PRO-001-304 MAIN BODY	MAIN BODY	1
2	164TOW-PRO-001-304 TOP	TOP	1
3	164TOW-PRO-001-304 ACCESS PANEL	ACCESS PANEL	1
4	164TOW-PRO-001-304 BACK CLOSURE	BACK CLOSURE	1
5	164TOW-PRO-001-304 BASE PLATE	BASE PLATE	1
6	12GA STIFFENER	STIFFENER	1
7	--	8-32 X 1/2" SS PAN HEAD SCREW	10

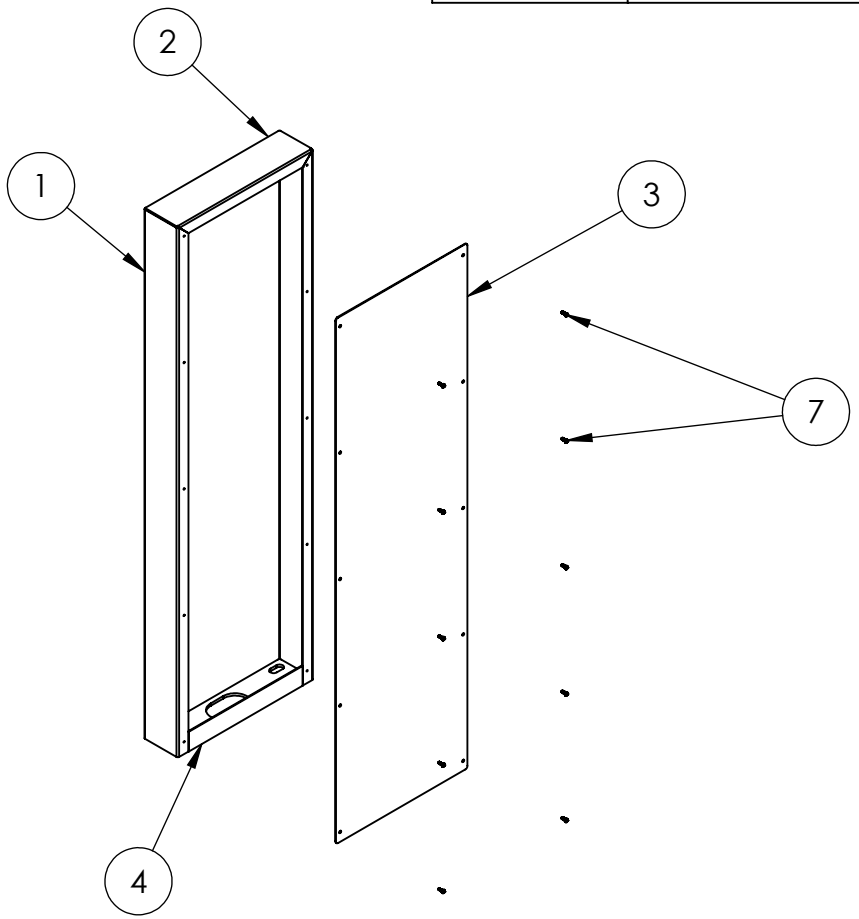

NOTES:
1. SEE STANDARD PREPARATION AND COATING INSTRUCTIONS FOR COATING PROCEDURE AND COLOR.
2. SEE STANDARD PACKAGING INSTRUCTIONS FOR PACKAGING PROCEDURE.

PEDESTALPRO.COM
1-800-660-3072

UNLESS OTHERWISE SPECIFIED:

DIMENSIONS ARE IN INCHES
TOLERANCES:
FRACTIONAL ±1/32
ANGULAR: ±2°
TWO PLACE DECIMAL ±0.010
THREE PLACE DECIMAL ±0.005

INTERPRET GEOMETRIC TOLERANCING PER: ASME Y14.5 -2009

	NAME	DATE
DRAWN		
CHECKED		

PROPRIETARY AND CONFIDENTIAL

THE INFORMATION CONTAINED IN THIS DRAWING IS THE SOLE PROPERTY OF PEDESTALPRO LLC. ANY REPRODUCTION IN PART OR AS A WHOLE WITHOUT THE WRITTEN PERMISSION OF PEDESTALPRO LLC IS PROHIBITED.

TITLE:
ASSEMBLY

THURSDAY, DECEMBER 19, 2024 11:08:06 AM

SIZE A

PART NO. 164TOW-PRO-001-304

REV A

WEIGHT: 78.164

NO SCALE

SHEET 2 OF 9